Fre -3009, 3010, 3078

Step 1

Remove original visor.
Assemble visor & brackets.
Mount to cab using original side screws.
If cab side screw holes are non existent,
Drilling will be necessary.

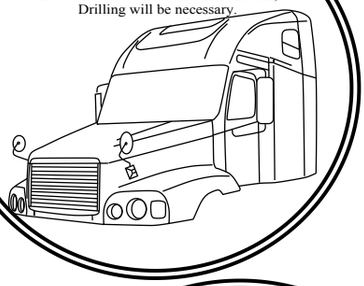

Step 2

Drill with a ½ drill bit
where the holes were if no original holes
are on the truck. Mark then insert
the weld nuts.

Step 3

Mount new brackets & tighten
them on to the truck.

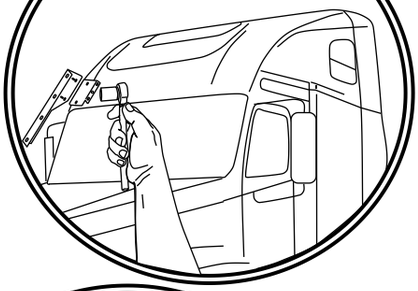

Step 4

Place the visor over brackets &
tighten all the screws.

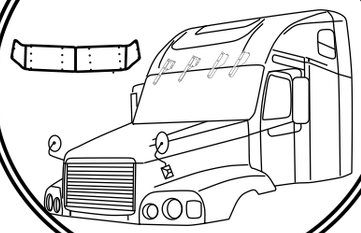

Step 5

You Are Finished! Remove
plastic off the visor & clean with windex.

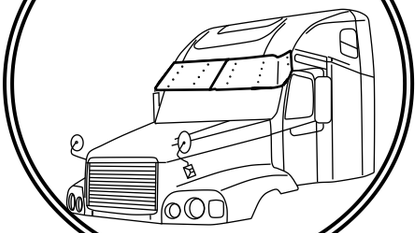

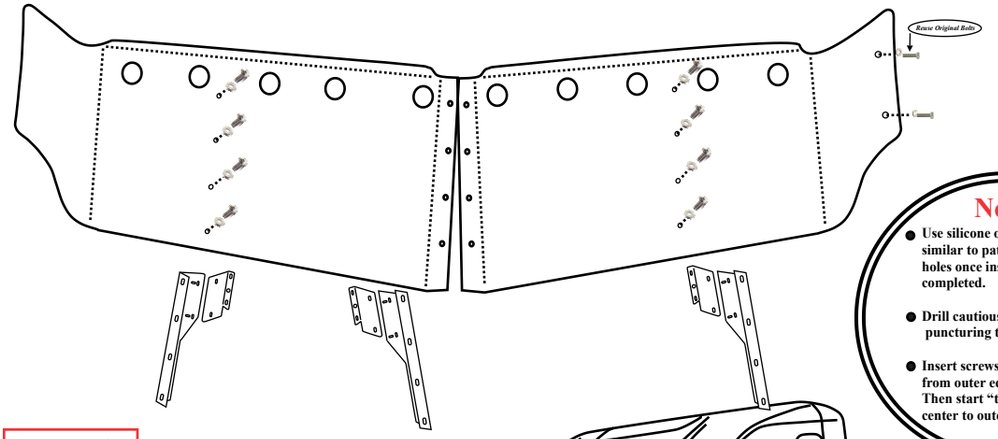

Notes

- **Use silicone or something similar to patch any exposed holes once installation is completed.**
- **Drill cautiously to avoid puncturing the cabs interior.**
- **Insert screws "loosely" starting from outer edge to center. Then start "tightening" from center to outer edge.**

Example

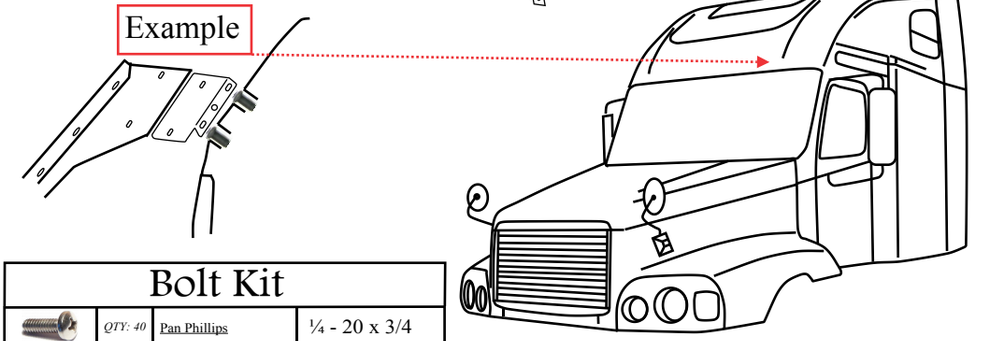

Bolt Kit

	QTY: 40	Pan Phillips	¼ - 20 x 3/4
	QTY: 88	Flat Washer	¼ x 5/8
	QTY: 8	Weld Nut	¼ - 20 x 1"
	QTY: 8	Hex Head	¼ - 20 x 1¼
	QTY: 40	Nylon Hex Nuts	¼ x 20